User Manual

Enterprise Router

Please read this manual before you start with the quick setup upon the first use. You can see the product name and model on the product label.
M30 is used for illustration in this User Manual unless otherwise specified.
For product or function details, please go to **www.ip-com.com.cn** or scan the **Product Documents** QR code in this manual to download the user guide.

I Get to know the router

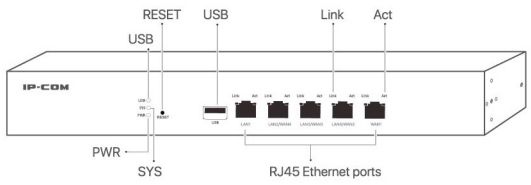

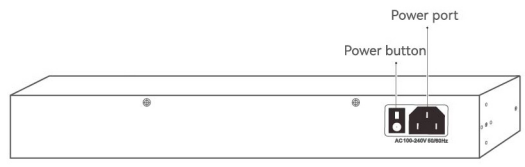

The indicators, ports and buttons on routers vary according to the actual model.

LED indicator	Status	Description
PWR	Solid on	The router is powered on properly.
	Off	The router is powered off or powered improperly.
SYS	Solid on	The system is starting up or not working properly.
	Blinking	The system is working properly.
	Off	The system is not started.
USB	Solid on	A USB device is connected to the USB port.
	Blinking	Data is read from or written to the USB device connected to the router.
	Off	A USB device is not connected or connected improperly to the USB port.
Link	Solid on	The port is connected properly.
	Off	The port is disconnected or connected improperly.
Act	Solid on	The port is connected properly with no data transmitted.
	Blinking	The port is connected properly with data transmitted.
	Off	The port is disconnected or connected improperly.

Port/Button	Description
USB	Used to connect USB devices such as USB flash disk and mobile hard disk.
WAN	Used to connect to a optical modem, DSL modem, cable modem or Ethernet jack.
WAN/LAN	WAN port or LAN port. The port type can be modified on the web UI of the router.
LAN	Used to connect to computers, switches, APs or cameras.
RESET (Reset)	Used to reset the router to factory settings. When the **SYS** LED indicator blinks, hold the button down for about 8 seconds, and then release it when all the LED indicators light up. The router is restored to factory settings.
Power button	Used to power on/off the router.
Power port	Use the included power adapter to supply power to the router.

II Install the router

Desktop mounting

Paste the foot pads (if any) onto the recesses in the four corners of the bottom of the router. Then place the router face up horizontally on a large, clean and stable desktop.

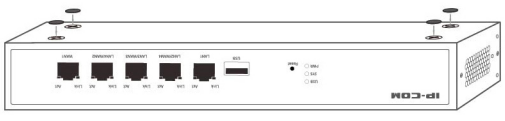

Rack mounting (19 inch)

This installation method can be used if L-shaped Brackets are included in the package.

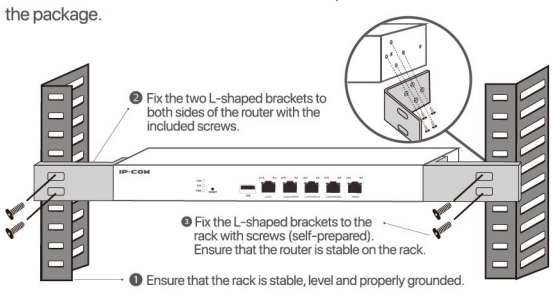

III Connect the router

Connect the router and other network devices according to the following topology.

Tips
Use the power cord or power adapter included in the package to power the router.
Turn on the power button of the router (if available).

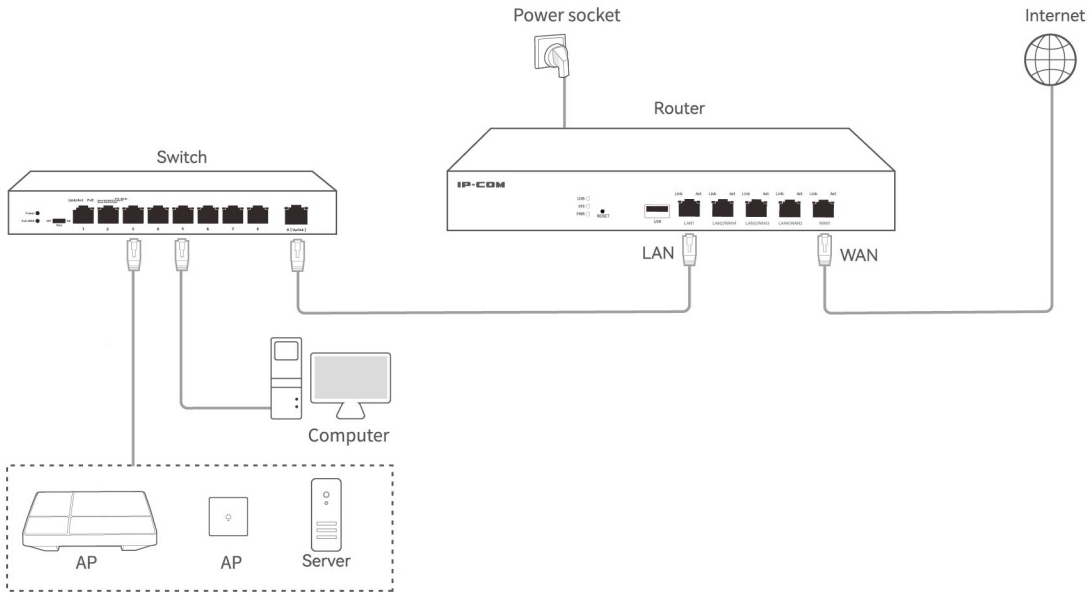

IV Configure the router

1. Connect your client to the router.
   - **Method 1: (Recommended):** Connect your computer to a LAN port of the router using an Ethernet cable.
   - **Method 2:** Connect WiFi-enabled devices such as smartphones to the WiFi network of the AP (connected to the router).
     – IP-COM APs that can be managed by the router: The WiFi name is **IP-COM_*XXXXXX*** (***XXXXXX*** is the last six digits of the router's MAC address (see the label of the router).
     – APs of other brands: The WiFi name is set by default.
2. Start a browser on the smartphone or computer connected to the router. Enter **ipcwifi.com** or **192.168.0.252** in the address bar to enter the initial setup page of the router.
3. Log in to the web UI according to the instructions on the page. Then you can configure the router.

Appendix A Get support and services

Scan the **Product Documents** QR code to get related documents, such as the quick installation guide and user guide.
* The product model can be found on the label of the device.

Product Documents
(such as quick installation guide and user guide)

Appendix B Safety Precautions

Before performing an operation, read the operation instructions and precautions to be taken, and follow them to prevent accidents. The warning and danger items in other documents do not cover all the safety precautions that must be followed. They are only supplementary information, and the installation and maintenance personnel need to understand the basic safety precautions to be taken.

- Please use the included power adapter/power cord.
- Wear an ESD wrist strap or ESD gloves during installation, and ensure that the device is powered off.
- Keep the device away from water, fire, high electric field, high magnetic field, and inflammable and explosive items.
- Unplug this device and disconnect all cables during lightning storms or when the device is unused for long periods.
- Do not use the power adapter if its plug or cord is damaged.
- Do not block any ventilation openings using things such as newspapers, table-cloth, curtains.
- If such phenomena as smoke, abnormal sound or smell appear when you use the device, immediately stop using it and disconnect its power supply, unplug all connected cables, and contact the after-sales service personnel.
- Disassembling or modifying the device or its accessories without authorization voids the warranty, and might cause safety hazards.
- Keep the ambient air clean. The device needs to be dusted regularly. Disconnect the power supply before cleaning the device. Do not clean the device with any liquid.
- If the device has a metal shell with a grounding terminal, do not damage the ground conductor or operate the device in the absence of well-installed ground conductor. Conduct the appropriate electrical inspection. Refer to the Lightning Protection Guide at the official website for instructions.

Appendix C FAQ

Q1: I cannot log in to the web UI of the router by visiting ipcwifi.com or 192.168.0.252. What should I do?

A1: Try the following solutions:
- If you are using a WiFi-enabled device, such as a smartphone:
  – Ensure that it is connected to the WiFi network of the router.
  – Ensure that the cellular network (mobile data) of the smartphone is disabled.
- If you are using a wired device, such as a computer:
  – Ensure that the computer is connected to a LAN port of the router properly using an Ethernet cable.
  – Ensure that the computer is set to **Obtain an IP address automatically** and **Obtain DNS server address automatically**, and that the IP address obtained by your computer is **192.168.0.*X***, where ***X*** ranges from 1 to 254 (except 252).
  – Clear the cache of your web browser of replace the web browser, and try login again.
  – Ensure that the IP address **192.168.0.252** is not used by another device in the LAN.

If the problem persists, reset the router by referring to **Q2**, and try again.

Q2: How to reset the router?

A2: When the **SYS** LED indicator blinks, hold down the **Reset/RESET** button for about 8 seconds, and then release it when all the LED indicators light up. The router is restored to factory settings.

CE Mark Warning

This is a Class A product. In a domestic environment, this product may cause radio interference, in which case the user may be required to take adequate measures.
The mains plug is used as disconnect device, the disconnect device shall remain readily operable.
NOTE: (1) The manufacturer is not responsible for any radio or TV interference caused by unauthorized modifications to this equipment.
(2) To avoid unnecessary radiation interference, it is recommended to use a shielded RJ45 cable.

Declaration of Conformity

Hereby, SHENZHEN IP-COM Networks Co., Ltd. declares that the device is in compliance with Directive 2014/53/EU.
The full text of the EU declaration of conformity is available at the following internet address: http://ip-com.com.cn/en/ce.html

FCC Statement

This equipment has been tested and found to comply with the limits for a Class A digital device, pursuant to Part 15 of the FCC Rules. These limits are designed to provide reasonable protection against harmful interference when the equipment is operated in a commercial environment. This equipment generates, uses, and can radiate radio frequency energy and, if not installed and used in accordance with the instruction manual, may cause harmful interference to radio communications. Operation of this equipment in a residential area is likely to cause harmful interference in which case the user will be required to correct the interference at his own expense.
Operation is subject to the following two conditions: (1) this device may not cause harmful interference, and (2) this device must accept any interference received, including interference that may cause undesired operation.

Caution!

Any changes or modifications not expressly approved by the party responsible for compliance could void the user's authority to operate the equipment.
NOTE: (1) The manufacturer is not responsible for any radio or TV interference caused by unauthorized modifications to this equipment. (2) To avoid unnecessary radiation interference, it is recommended to use a shielded RJ45 cable.

RECYCLING

This product bears the selective sorting symbol for Waste electrical and electronic equipment (WEEE). This means that this product must be handled pursuant to European directive 2012/19/EU in order to be recycled or dismantled to minimize its impact on the environment.
User has the choice to give his product to a competent recycling organization or to the retailer when he buys new electrical or electronic equipment.

Technical Support
Shenzhen IP-COM Networks Co., Ltd.
Address: Room 101, Unit A, First Floor, Tower E3, No.1001, Zhongshanyuan Road, Nanshan District, Shenzhen, China. 518052
Email: info@ip-com.com.cn
Website: www.ip-com.com.cn

Copyright
©2022 IP-COM Networks Co., Ltd. All rights reserved.
This documentation (including pictures, images, and product specifications, etc.) is for reference only. To improve internal design, operational function, and/or reliability, IP-COM reserves the right to make changes to the products described in this document without obligation to notify any person or organization of such revisions or changes.

V1.0 Keep for future reference